KOYO

Linear ball bearings

Linear ball bearings have an outer cylinder and a cage with three or more elliptic raceways inside.
Balls are aligned on these raceways.

	Ball complement bore diameter (mm)
SDM series	6 –120
SDMF, SDMK series	6 – 80
SDE series	5 – 80

Standard type	Clearance adjustable type	Open type
Suitable for a wide range of applications and widely used in practice. The upper-class type is used for general purposes. The precision-class type is used when the bearing is required to be highly accurate.	The outer cylinder and side plate are slit axially so that the clearance between the bearing and shaft can be adjusted. Together with the use of a bore adjustable housing, a no-clearance state or light-preloaded state can be realized without fitting.	The outer cylinder and side plate each have a slit which is equivalent in size to a recirculating ball row raceway, so that the bearing does not interfere with a shaft strut during operation. This type is suitable for use with very long shafts. The bore diameter is adjustable.

Flanged type

Can be fit quickly, and helps make equipment smaller and lighter in weight. Helps reduce cost.

Sealed type

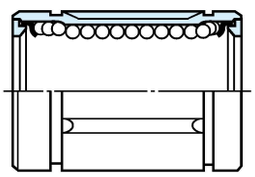

One or both side(s) is/are sealed with special synthetic rubber so that foreign material cannot enter the bearing while the grease is kept from leaking. This sealing can be provided on all bearings of the standard, clearance adjustable, open, and flanged types.

Bearing numbering system

SDM 35 UU AJ □□ □

Series code	Ball complement bore diameter number	Seal code	Shape code	Material code	Tolerance code

Series code		SDM : metric series SDMF : metric series (flanged type) SDMK : metric series (flanged type) SDE : metric series (popular ones in europe) SDB : inch series
Ball complement bore diameter number	Metric series	35 : ball complement bore diameter 35 mm
	Inch series	4 : ball complement bore diameter 4/16 = 1/4 inch
Seal code		UU : both sides sealed U : single side sealed Not specified : not sealed
Shape code		Not specified : standard type AJ : clearance adjustable type OP : open type
Material code	Outer cylinder and balls	Not specified : high carbon chrome bearing steel
	Cage	Not specified : cold rolled steel sheet MG : synthetic resin
Tolerance code		Not specified : upper-class P : precision-class

Linear ball bearing service life

Linear ball bearing service life refers to the distance that the bearing travels until the outer cylinder, balls or shaft become damaged because of rolling contact fatigue from repeated stress.

The basic dynamic load rating refers to the magnitude of a constant load which makes a bearing's service life end after it travels a distance of 50 km.

The linear ball bearing service life and the basic dynamic load rating bear the relation shown below :

$$L = 50\left(\frac{C}{P}\right)^3$$

where :

L : service life km
P : radial load on the bearing N
C : bearing basic dynamic load rating N
(refer to the specification table.)

Shaft surface hardness is closely related to running performance. In general, it is best for the hardness to be 60 thru 64 HRC.

If the hardness is 60 HRC or lower, the basic dynamic load rating (C) should be corrected by multiplying it by the appropriate hardness coefficient selected from Table 1.

Table 1 Hardness coefficients

Shaft hardness HRC	Hardness coefficient f_H
60	1
59	0.97
57	0.88
55	0.76
53	0.64
51	0.52

● Ball row arrangement and load rating

The basic load ratings given in the specification table are those measured when a load is applied directly above a ball row (Q_1). When the load is applied between two ball rows, the load ratings become larger (Q_2). Table 2 lists the ratios of Q_2 ratings to Q_1 ratings.

Table 2 Ball row arrangement and the comparison of load ratings

Number of ball rows	When a load is applied directly above a row (Q_1)	When a load is applied between two rows (Q_2)	Ratios of Q_2 to Q_1
4	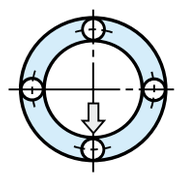	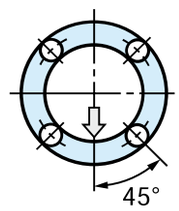	1.414
5	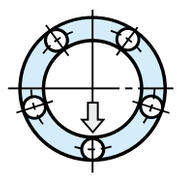	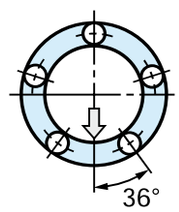	1.463
6	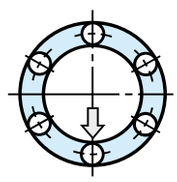	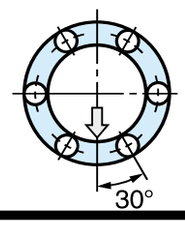	1.280

[Note] When there are only three rows, $Q_2 / Q_1 = 1$

Table 4 SDM series linear ball bearing tolerances Unit : μm

Bearing number SDM	Ball complement bore diameter (F_w) deviation				Outside diameter (D) deviation		Overall length (L) deviation		B deviation		Eccentricity	
	Precision-class		Upper-class								Precision-class	Upper-class
	upper	lower	upper	lower	upper	lower	upper	lower	upper	lower	max.	
6, 8	0	– 6	0	– 9	0	– 11	0	– 200	0	– 200	8	12
10, 12, 13, 16	0	– 6	0	– 9	0	– 13	0	– 200	0	– 200	8	12
20	0	– 7	0	– 10	0	– 16	0	– 200	0	– 200	10	15
25, 30	0	– 7	0	– 10	0	– 16	0	– 300	0	– 300	10	15
35, 38, 40, 50	0	– 8	0	– 12	0	– 19	0	– 300	0	– 300	12	20
60	0	– 9	0	– 15	0	– 22	0	– 300	0	– 300	17	25
80	0	– 9	0	– 15	0	– 22	0	– 400	0	– 400	17	25
100, 120	0	– 10	0	– 20	0	– 25	0	– 400	0	– 400	20	30

Recommended fits for linear ball bearings

Table 3 lists the recommended fits for linear ball bearings.

When a bearing is mounted with a housing, the normal clearance fit should be selected. When the application is highly precise or special, the transition fit should be selected.

For the clearance adjustable and open type bearings, it is best for the shaft diameter to be smaller than the ball complement bore diameter lower deviation, and for the housing bore diameter to be larger than the bearing outside diameter upper deviation.

Table 3 Linear ball bearing recommended fits

Bearing	Tolerance	Shaft tolerance class		Housing bore tolerance class	
		Normal clearance	Close clearance	Clearance fit	Transition fit
SDM, SDB	Upper-class	f 6, g 6	h 6	H 7	JS 7 (J 7)
	Precision-class	f 5, g 5	h 5	H 6	JS 6 (J 6)
SDE	–	h 6	js 6 (j 6)	H 7	JS 7 (J 7)

Linear ball bearing clearance

Linear ball bearings provide linear motion smoothly with little wear when the clearance is 0.003 to 0.012 mm. However, when clearance increase due to wear is considered critical, e.g. when the bearing is provided to press die sets, precision machine tools or precision testers; when the bearing becomes unable to slide because of moment; or when smooth bearing operation is needed with no clearance provided, the clearance is adjusted to zero or negative.

In such a case, shafts generally need to be mounted by "selective fitting."

They should be handled carefully so as not to be preloaded excessively.

As Fig. 1 shows, the clearance of bearings with numbers SDM 6 thru SDM 10 can be easily set to zero or negative, by adjusting one of the three ball rows with a bolt.

Consult with JTEKT on the gauging of linear ball bearings and shafts which should be mounted by "selective fitting," as well as on the whole design of shafts.

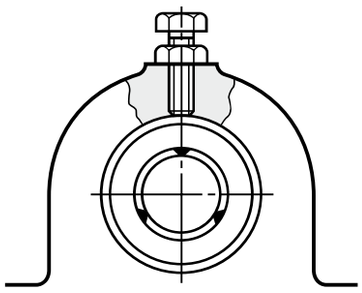

Fig. 1 Clearance adjustment

Table 5 SDE series linear ball bearing tolerances Unit : μm

Bearing number SDE	Ball complement bore diameter (F_w) deviation		Outside diameter (D) deviation		Overall length (L) deviation		B deviation		Eccentricity
	upper	lower	upper	lower	upper	lower	upper	lower	max.
5, 8	+ 8	0	0	– 8	0	– 200	0	– 200	12
10, 12	+ 8	0	0	– 9	0	– 200	0	– 200	12
16	+ 9	– 1	0	– 9	0	– 200	0	– 200	12
20	+ 9	– 1	0	– 11	0	– 200	0	– 200	15
25, 30	+ 11	– 1	0	– 11	0	– 300	0	– 300	15
40, 50	+ 13	– 2	0	– 13	0	– 300	0	– 300	17
60	+ 13	– 2	0	– 15	0	– 400	0	– 400	20
80	+ 16	– 4	0	– 15	0	– 400	0	– 400	20

Linear ball bearings

d 5 ~ (20) mm

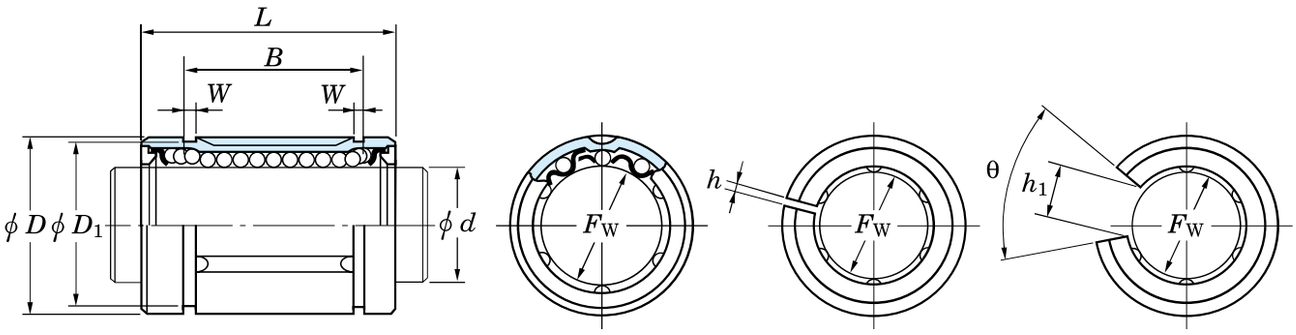

SDM, SDE — Standard type — Clearance adjustable type (...AJ) — Open type (...OP)

Shaft dia. (mm) d	Dimensions (mm) F_w	D	L	B	W	D_1	h	h_1	θ	Bearing No.[1] Standard type	Clearance adjustable type	Open type
5	5	12	22	14.5	1.1	11.5	—	—	—	**SDE5**	—	—
6	6	12	19	13.5	1.1	11.5	1	—	—	**SDM6**	**SDM6AJ**	—
	6	12	19	13.5	1.1	11.5	1	—	—	**SDM6MG**	**SDM6AJMG**	—
8	8	15	17	11.5	1.1	14.3	1	—	—	**SDM8S**	**SDM8SAJ**	—
	8	15	17	11.5	1.1	14.3	1	—	—	**SDM8SMG**	**SDM8SAJMG**	—
	8	15	24	17.5	1.1	14.3	1	—	—	**SDM8**	**SDM8AJ**	—
	8	15	24	17.5	1.1	14.3	1	—	—	**SDM8MG**	**SDM8AJMG**	—
	8	16	25	16.5	1.1	15.2	1	—	—	**SDE8**	**SDE8AJ**	—
	8	16	25	16.5	1.1	15.2	1	—	—	**SDE8MG**	**SDE8AJMG**	—
10	10	19	29	22	1.3	18	1	6.8	80°	**SDM10**	**SDM10AJ**	**SDM10OP**
	10	19	29	22	1.3	18	1	—	—	**SDM10MG**	**SDM8AJMG**	—
	10	19	29	22	1.3	18	1	6.8	80°	**SDE10**	**SDE10AJ**	**SDE10OP**
	10	19	29	22	1.3	18	1	—	—	**SDE10MG**	**SDE10AJMG**	—
12	12	21	30	23	1.3	20	1.5	8	80°	**SDM12**	**SDM12AJ**	**SDM12OP**
	12	21	30	23	1.3	20	1.5	—	—	**SDM12MG**	**SDM12AJMG**	—
	12	22	32	22.9	1.3	21	1.5	7.5	78°	**SDE12**	**SDE12AJ**	**SDE12OP**
	12	22	32	22.9	1.3	21	1.5	—	—	**SDE12MG**	**SDM12AJMG**	—
13	13	23	32	23	1.3	22	1.5	9	80°	**SDM13**	**SDM13AJ**	**SDM13OP**
	13	23	32	23	1.3	22	1.5	—	—	**SDM13MG**	**SDM13AJMG**	—
16	16	26	36	24.9	1.3	24.9	1.5	10	78°	**SDE16**	**SDE16AJ**	**SDE16OP**
	16	26	36	24.9	1.3	24.9	1.5	—	—	**SDE16MG**	**SDE16AJMG**	—
	16	28	37	26.5	1.6	27	1.5	11	80°	**SDM16**	**SDM16AJ**	**SDM16OP**
	16	28	37	26.5	1.6	27	1.5	—	—	**SDM16MG**	**SDM16AJMG**	—
20	20	32	42	30.5	1.6	30.5	1.5	11	60°	**SDM20**	**SDM20AJ**	**SDM20OP**
	20	32	42	30.5	1.6	30.5	1.5	—	—	**SDM20MG**	**SDM20AJMG**	—

[Note] 1) JTEKT also manufactures sealed types, which are identified by U (one side sealed) or UU (both sides sealed) after ball complement bore diameter number.

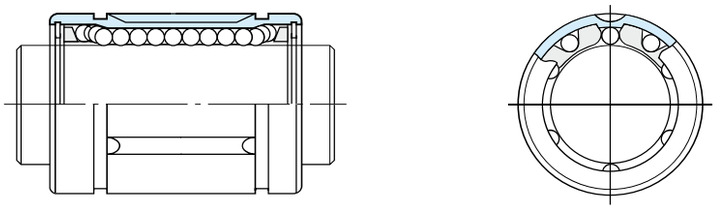

SDM...MD

No. of ball rows			Basic load ratings (N)		(Refer.) Mass (g)
Standard type	Clearanece adjustable type	Open type	C_r	C_{0r}	Standard type
3	—	—	108	183	10
3	3	—	108	186	7
4	4	—	108	186	6
3	3	—	96	160	10
4	4	—	96	160	9
3	3	—	122	223	14
4	4	—	134	255	13
3	3	—	122	223	20
4	4	—	134	255	18
4	4	3	259	424	27
4	4	—	259	424	23
4	4	3	259	424	27
4	4	—	259	424	23
4	4	3	260	431	31
4	4	—	260	431	27
4	4	3	289	503	42
4	4	—	289	503	37
4	4	3	289	506	41
4	4	—	289	506	35
4	4	3	319	587	53
4	4	—	319	587	47
4	4	3	480	766	69
4	4	—	480	766	59
5	5	4	590	1 010	92
5	5	—	590	1 010	79

Linear ball bearings

d (20) ~ 80 mm

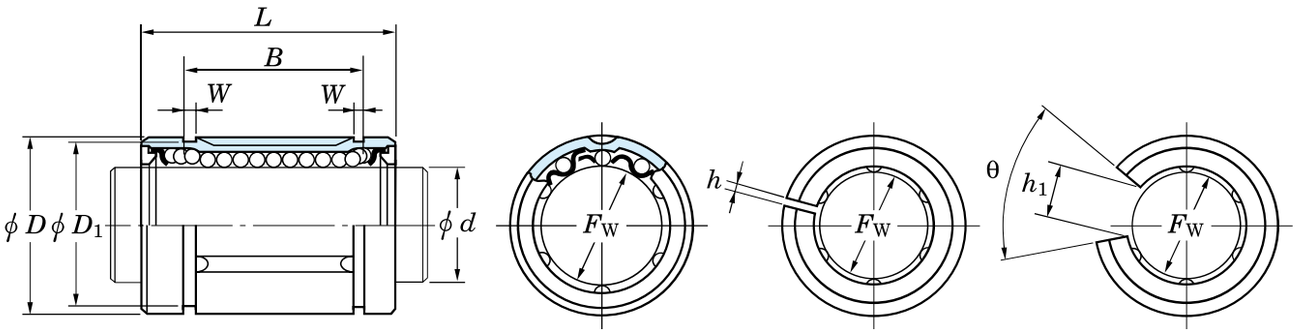

SDM, SDE | Standard type | Clearance adjustable type (...AJ) | Open type (...OP)

Shaft dia. (mm) d	Dimensions (mm) F_w	D	L	B	W	D_1	h	h_1	θ	Bearing No.[1] Standard type	Clearance adjustable type	Open type
20	20	32	45	31.5	1.6	30.3	2	10	60°	**SDE20**	**SDE20AJ**	**SDE20OP**
	20	32	45	31.5	1.6	30.3	2	—	—	**SDE20MG**	**SDE20AJMG**	—
25	25	40	58	44.1	1.85	37.5	2	12.5	60°	**SDE25**	**SDE25AJ**	**SDE25OP**
	25	40	58	44.1	1.85	37.5	2	—	—	**SDE25MG**	**SDE25AJMG**	—
	25	40	59	41	1.85	38	2	12	60°	**SDM25**	**SDM25AJ**	**SDM25OP**
	25	40	59	41	1.85	38	2	—	—	**SDM25MG**	**SDM25AJMG**	—
30	30	45	64	44.5	1.85	43	2.5	15	50°	**SDM30**	**SDM30AJ**	**SDM30OP**
	30	45	64	44.5	1.85	43	2.5	—	—	**SDM30MG**	**SDM30AJMG**	—
	30	47	68	52.1	1.85	44.5	2	12.5	50°	**SDE30**	**SDE30AJ**	**SDE30OP**
	30	47	68	52.1	1.85	44.5	2	—	—	**SDE30MG**	**SDE30AJMG**	—
35	35	52	70	49.5	2.1	49	2.5	17	50°	**SDM35**	**SDM35AJ**	**SDM35OP**
	35	52	70	49.5	2.1	49	2.5	—	—	**SDM35MG**	**SDM35AJMG**	—
38	38	57	76	58.5	2.1	54.5	3	18	50°	**SDM38**	**SDM38AJ**	**SDM38OP**
40	40	60	80	60.5	2.1	57	3	20	50°	**SDM40**	**SDM40AJ**	**SDM40OP**
	40	60	80	60.5	2.1	57	3	—	—	**SDM40MG**	**SDM40AJMG**	—
	40	62	80	60.6	2.15	59	3	16.8	50°	**SDE40**	**SDE40AJ**	**SDE40OP**
	40	62	80	60.6	2.15	59	3	—	—	**SDE40MG**	**SDE40AJMG**	—
50	50	75	100	77.6	2.65	72	3	21	50°	**SDE50**	**SDE50AJ**	**SDE50OP**
	50	80	100	74	2.6	76.5	3	25	50°	**SDM50**	**SDM50AJ**	**SDM50OP**
60	60	90	110	85	3.15	86.5	3	30	50°	**SDM60**	**SDM60AJ**	**SDM60OP**
	60	90	125	101.7	3.15	86.5	3	27.2	54°	**SDE60**	**SDE60AJ**	**SDE60OP**
80	80	120	140	105.5	4.15	116	3	40	50°	**SDM80**	**SDM80AJ**	**SDM80OP**
	80	120	165	133.7	4.15	116	3	36.3	54°	**SDE80**	**SDE80AJ**	**SDE80OP**

[Note] 1) JTEKT also manufactures sealed types, which are identified by U (one side sealed) or UU (both sides sealed) after ball complement bore diameter number.

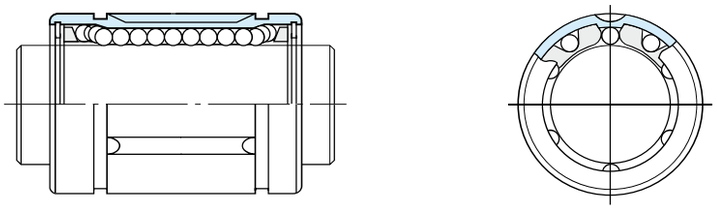

SDM...MD

No. of ball rows			Basic load ratings (N)		(Refer.) Mass (g)
Standard type	Clearanece adjustable type	Open type	C_r	C_{0r}	Standard type
5	5	4	590	1 010	96
5	5	—	590	1 010	88
5	5	4	1 130	2 030	190
5	5	—	1 130	2 030	170
5	5	4	1 130	2 030	200
5	5	—	1 130	2 030	170
6	6	5	1 470	2 770	250
6	6	—	1 470	2 770	220
6	6	5	1 470	2 770	340
6	6	—	1 470	2 770	320
6	6	5	1 580	3 070	370
6	6	—	1 580	3 070	330
6	6	5	2 020	3 600	490
6	6	5	2 180	4 010	590
6	6	—	2 180	4 010	530
6	6	5	2 180	4 010	710
6	6	—	2 180	4 010	650
6	6	5	4 020	7 110	1 050
6	6	5	4 420	7 150	1 500
6	6	5	5 170	9 030	1 850
6	6	5	6 470	11 100	1 900
6	6	5	8 180	12 800	4 200
6	6	5	8 890	14 500	4 800

Polígono Industrial O Rebullón s/n. 36416 - Mos - España - rodavigo@rodavigo.com

Linear ball bearings

d 100 ~ 120 mm

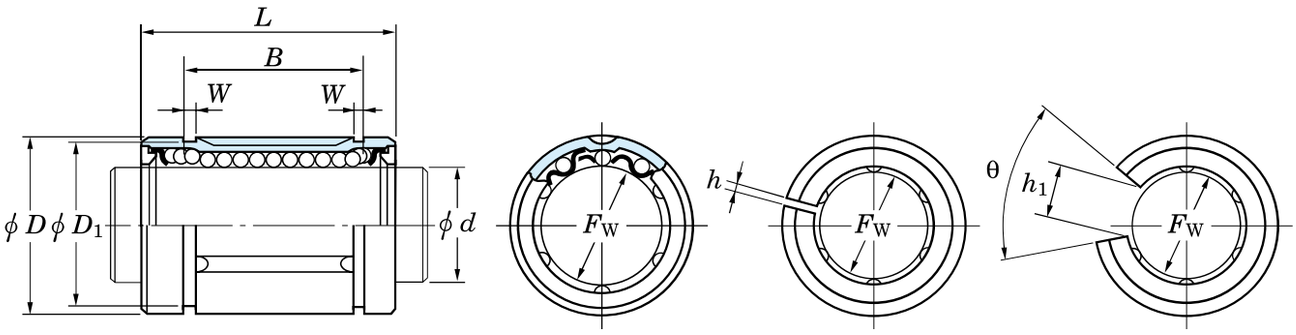

SDM, SDE | Standard type | Clearance adjustable type (...AJ) | Open type (...OP)

Shaft dia. (mm)	Dimensions (mm)									Bearing No.[1]		
d	F_w	D	L	B	W	D_1	h	h_1	θ	Standard type	Clearance adjustable type	Open type
100	100	150	175	125.5	4.15	145	3	50	50°	**SDM100**	**SDM100AJ**	**SDM100OP**
120	120	180	200	158.6	4.15	175	4	85	80°	**SDM120**	**SDM120AJ**	**SDM120OP**

[Note] 1) JTEKT also manufactures sealed types, which are identified by U (one side sealed) or UU (both sides sealed) after ball complement bore diameter number.

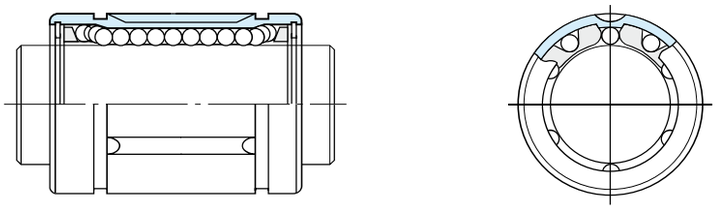

SDM...MD

	No. of ball rows			Basic load ratings (N)		(Refer.) Mass (g)
	Standard type	Clearanece adjustable type	Open type	C_r	C_{0r}	Standard type
	6	6	5	12 300	19 700	8 200
	8	8	6	22 300	39 100	15 500

Linear ball bearings flanged type

d 6 ~ 50 mm

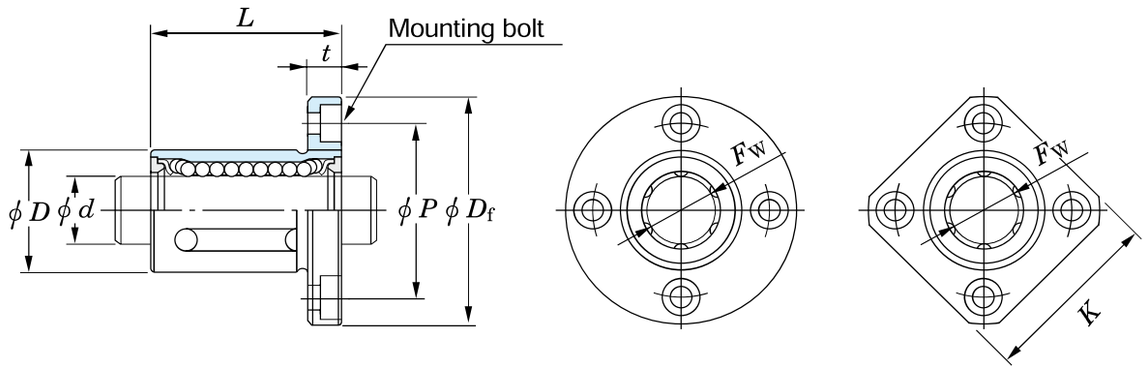

SDMF, SDMK Round-flanged Square-flanged

Shaft dia. (mm) d	Dimensions (mm) F_w	D	L	D_f	K	t	P	Bolt size	Bearing No. Round-flanged type	Bearing No. Square-flanged type
6	6	12	19	28	22	5	20	M3	**SDMF6**	**SDMK6**
	6	12	19	28	22	5	20	M3	**SDMF6MG**	**SDMK6MG**
8	8	15	24	32	25	5	24	M3	**SDMF8**	**SDMK8**
	8	15	24	32	25	5	24	M3	**SDMF8MG**	**SDMK8MG**
10	10	19	29	40	30	6	29	M4	**SDMF10**	**SDMK10**
	10	19	29	40	30	6	29	M4	**SDMF10MG**	**SDMK10MG**
12	12	21	30	42	32	6	32	M4	**SDMF12**	**SDMK12**
	12	21	30	42	32	6	32	M4	**SDMF12MG**	**SDMK12MG**
13	13	23	32	43	34	6	33	M4	**SDMF13**	**SDMK13**
	13	23	32	43	34	6	33	M4	**SDMF13MG**	**SDMK13MG**
16	16	28	37	48	37	6	38	M4	**SDMF16**	**SDMK16**
	16	28	37	48	37	6	38	M4	**SDMF16MG**	**SDMK16MG**
20	20	32	42	54	42	8	43	M5	**SDMF20**	**SDMK20**
	20	32	42	54	42	8	43	M5	**SDMF20MG**	**SDMK20MG**
25	25	40	59	62	50	8	51	M5	**SDMF25**	**SDMK25**
	25	40	59	62	50	8	51	M5	**SDMF25MG**	**SDMK25MG**
30	30	45	64	74	58	10	60	M6	**SDMF30**	**SDMK30**
	30	45	64	74	58	10	60	M6	**SDMF30MG**	**SDMK30MG**
35	35	52	70	82	64	10	67	M6	**SDMF35**	**SDMK35**
	35	52	70	82	64	10	67	M6	**SDMF35MG**	**SDMK35MG**
40	40	60	80	96	75	13	78	M8	**SDMF40**	**SDMK40**
	40	60	80	96	75	13	78	M8	**SDMF40MG**	**SDMK40MG**
50	50	80	100	116	92	13	98	M8	**SDMF50**	**SDMK50**

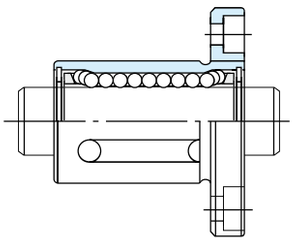

SDMF...MG
SDMK...MG (Synthetic resin)

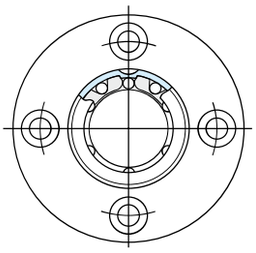

Round-flanged

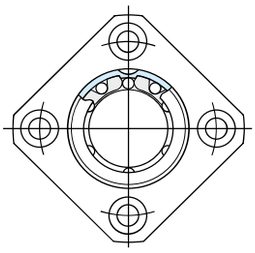

Square-flanged

	No. of ball rows	Basic load ratings (N) C_r	C_{0r}	(Refer.) Mass (g) Round-flanged type
	3	108	186	23
	4	108	186	22
	3	122	223	35
	4	134	255	34
	4	259	424	65
	4	259	424	61
	4	260	431	72
	4	260	431	68
	4	289	506	83
	4	289	506	77
	4	480	766	120
	4	480	766	110
	5	590	1 010	170
	5	590	1 010	160
	5	1 130	2 030	290
	5	1 130	2 030	270
	6	1 470	2 770	440
	6	1 470	2 770	410
	6	1 580	3 070	610
	6	1 580	3 070	560
	6	2 180	4 010	1 000
	6	2 180	4 010	930
	6	4 420	7 150	2 000

Linear ball bearings flanged type

d 60 ~ 80 mm

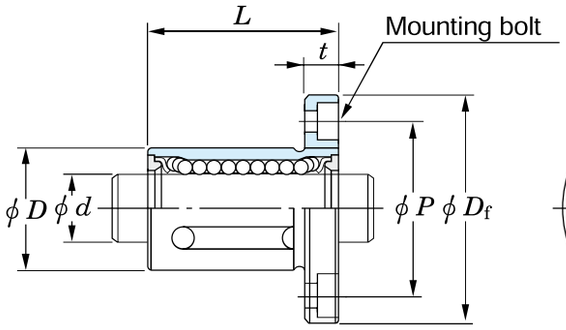

SDMF, SDMK

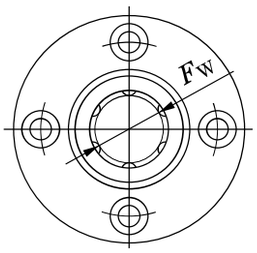

Round-flanged

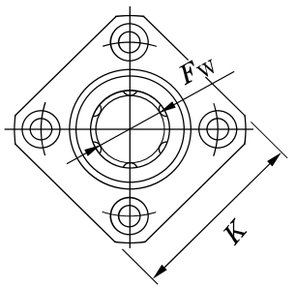

Square-flanged

Shaft dia. (mm) d	Dimensions (mm) F_w	D	L	D_f	K	t	P	Bolt size	Bearing No. Round-flanged type	Square-flanged type
60	60	90	110	134	106	18	112	M10	**SDMF60**	**SDMK60**
80	80	120	140	164	136	18	142	M10	**SDMF80**	**SDMK80**

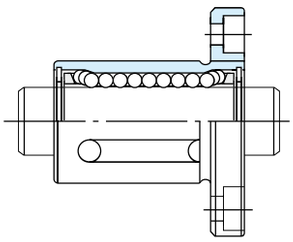

SDMF...MG
SDMK...MG (Synthetic resin)

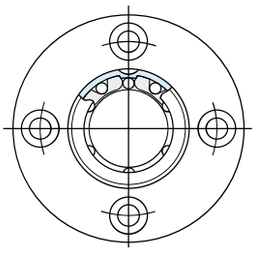

Round-flanged

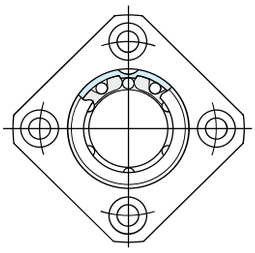

Square-flanged

	No. of ball rows	Basic load ratings (N) C_r	C_{0r}	(Refer.) Mass (g) Round-flanged type
	6	5 170	9 030	2 800
	6	8 180	12 800	5 400